www.ibrubinetterie.it

MAGICTOUCH — Range
MU220 — Product

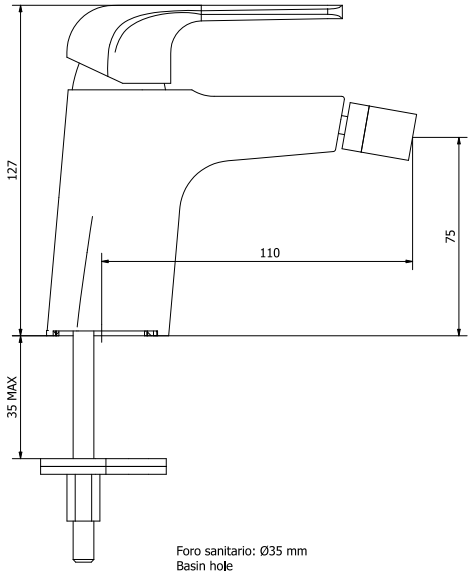

Product Description

Mono hole installation bidet mixer with a 1-1\4" click-clack automatic pop-up waste, a metal lever and the base integrated within the body as single-casted.

Available Finishings

Chrome	X	Glossy Black		PVD Gold		Copper	
Nickel Brushed		Matt White		Gold		Bronze	
Glossy White		Matt Black		Rose Gold		YO - Your Own	X

Tech Specifications

	iB Standard	Possible Alternative
Cartridge	iB 30 mms Ceramic Discs Cartridge	Flow Restrictions – See below
Wall Hoses	Flexible Inox 3\8", 400 mms long	Flexible Inox 1\2", 400 mms long Copper Tails PEX Pipes Different lenghts available on request
Aerator	NEOPERL Perlator	NEOPERL PCA (Flow Restriction – See below)
Flow Rate (+/- 10%)		
Material	Brass According to CUZN35PB2AL-B(CB752S) Max Lead content: 1,6%	
Production	Main body is a single casted piece	

1 BAR	7,2 l\m
2 BAR	10,2 l\m
3 BAR	12,5 l\m

Changing aerator or adding flow restrictors in the hoses, the following range of TOP flow rates can be achieved	0,5 l\m
	3,,0 l\m
	5,5 l\m
	7,,0 l\m
	8,,0 l\m
	9,0 l\m
	11,0 l\m

info@ibrubinetterie.it
p.iva 01785230986 capitale sociale € 420.000,00 i.v.
T +39 030 802101 F +39 030 803097
iB Rubinetterie SpA via dei pianotti, 3/5 - 25068 sarezzo (bs) - Italy

Elenco parti			
EL	CODICE	NUMERO DI MAGAZZINO	QT
1	AQ0014075	Handle	1
2	AQ0014512	Cartridge fixing nut chromed cover M32x1.5	1
3	AQ0014513	Cartridge fixing nut M42x1.5	1
4	AQ0014152	Ceramic cartridge Ø30	1
5	AQ0014663	Mixer body	1
6	AQ0013500	Articulated joint for bidet M16x1	1
7	AQ0013501	Perlator M16x1 (AMF 16x1)	1
8	AQ0014515	Fixing set	1
9	AQ0013811	Inox hose	2
10	AQ0009837	Simple rapid waste 1"1/4	1

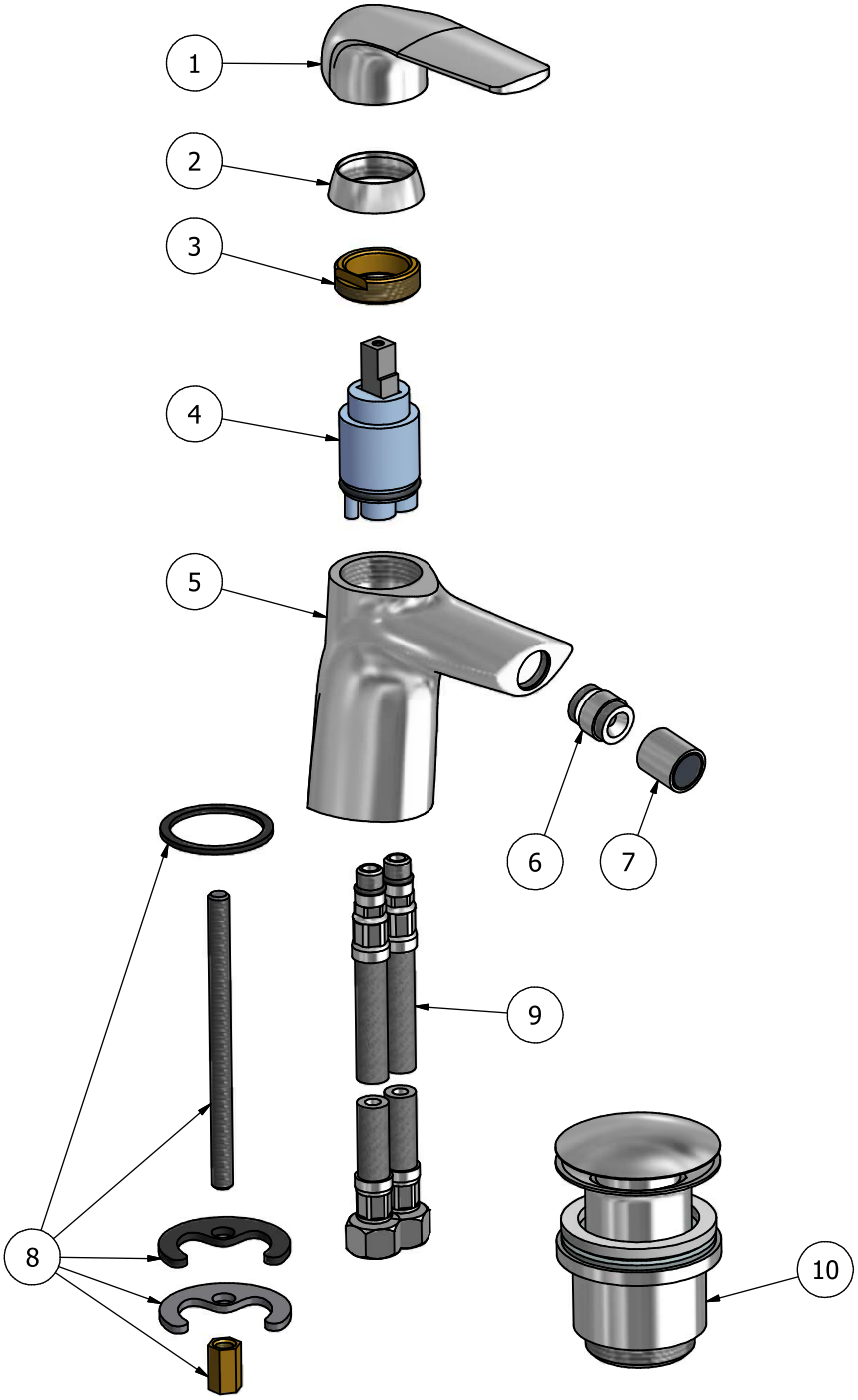

A termini di legge questo disegno non può essere riprodotto senza la nostra autorizzazione

Italian design culture
Via dei Pianotti 3/5
25068 Sarezzo - BRESCIA
tel. 030802101 fax. 030803097
www.ibrubinetterie.it

Tolleranze generali	Peso	Scala	Formato
±0.1			A3

Materiale

Disegnatore	Data creazione	Approvato da	Approvato il
Vivenzi M.	16/03/2015		

Denominazione: Bidet mixer

Codice: KMU220CCXN_1

WARRANTY

all iB Rubinetterie SpA products are warrented for 10 years from the date of purchase, for the following cases:
- defects of casting, porosity and chrome plating
- operating defects caused by incorrect fabrication.

The warranty provides for the repair or replacement of products with fabrication defects recognized by our technical office.
There is no other type of compensation and the merchandise must be returned FOB our warehouse.
The warranty only cover surface defects (scartches, dings, etc.) on fittings that have not been installed and used, returned in its original packaging with all components.
O-rings, gasket seals ancd components subject to wear proportional to use are warranted for 2 years.

The warranty is void in the following cases:
- error installing and putting the profuct into service.
- deterioration of chrome-plated surfaces due to use of cleaning products containing acids or abrasive substances
- deterioration of surface with finishes other than chrome plating. Their durability is, in fact, dependent on the user's care and gentleness of use.
- deterioration of the fitting due incorrect installation.
- improper repairs and maintenance performed without the company's prior authorization.

The warranty from iB Rubinetterie SpA is not renewable.

Cleaning:
We recommend cleaning chrome-plated and gold-finish surface with water and soap, using a soft cloth.
Do not use detergents that contain hydrochloric acid or abrasive substances.
Plastic parts must only be cleanend with soap and water and soft cloth.

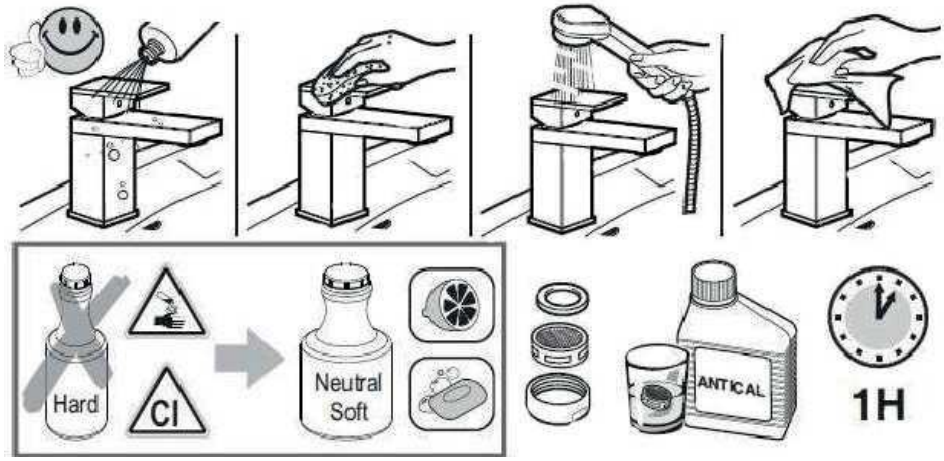

IMPORTANT

Pressure & Temperature Requirements.

- Hot and cold water inlet pressures should be equal.
- Inlet pressure range: 150-1000 kPa
- New Regulation: -500 kPa maximum operating pressure at any outlet within a building. (Ref. AS/NZS 3500.1-2003, Clause 3.3.4)
- Maximum hot water temperature: 80°C.

italian design culture

iB Rubinetterie S.p.A.
Via dei Pianotti 3/5
25068 SAREZZO (BS) Italy
Iscr. Reg. Impr. BS 01785230986
R.E.A. BS 352087
P.IVA IT01785230986
Capitale Sociale € 420.000,00 i.v.
phone +39 030 802101
fax +39 030 803097
info@ibrubinetterie.it
www.ibrubinetterie.it